VERS-LOUVER-SK (07) FOR TUNABLE APPLICATIONS

24VDC Linear Fixtures - Suspended

- 80 Suspension Kit configurations allow fixture to be seamlessly incorporated into any interior
- Create long, continuous lines of light with easy-to-use inline bracket and double feed joiner connectors
- A VERSatile fixture with a black louver that is designed to eliminate glare
- A custom-sized black louver fits snugly above a low-profile clear or diffused lens in the interior of the housing
- Features integrated metal endcaps and durable anodized aluminum housings
- With standard internal White Optics coating, fixtures achieve greater lumen efficacies
- Consult factory for field assembly options

INFORMATION REQUIRED FOR LIGHTING SCHEDULE

1 PRODUCT	2 WATTS/ FT	3 CCT	4 RATED	5 LENS	6 EXTERNAL LOUVER
					N/A

ADDITIONAL INFORMATION REQUIRED TO ORDER

7 WIRE INPUT/ OUTPUT	8 CONNECTOR/ WIRE IN	9 CONNECTOR/ WIRE OUT	10 WIRE COLOR	11 WIRE TYPE	12 MOUNTING	13 FINISH	14 LENGTH (IN)	15 EXACT/ OPTIMAL
	BW	CLS	SV	AWM	SK			

Sample Part Number: **VERS-07-DW-2.5HE-20/30-DRY-DF-P1-CON6-CON6-BK-CL2-MG-BK-48"-E**

1 PRODUCT

VERS-07-SK-DW
VERS-07-SK-DW-USA

Select USA option for BAA and BABA projects. Only DRY ratings apply.

LED engine is built with 3 wires requiring 0-10V, DMX or DALI control. Using DALI, DMX, or non QTL power supplies may double watts/ft. See following pages for compatible power supplies.

2 WATTS/FT

1.5HE 1.5W/ft HE
2.5HE 2.5W/ft HE

1.5HE 1.5W/ft HE
2.5HE 2.5W/ft HE

3 CCT

18/30 1800K/3000K
18/35 1800K/3500K
20/27 2000K/2700K
20/30 2000K/3000K
24/40 2400K/4000K
27/40 2700K/4000K
27/55 2700K/5500K

22/30 2200K/3000K
22/35 2200K/3500K
24/30 2400K/3000K
24/40 2400K/4000K
27/40 2700K/4000K

4 RATED

DRY IP20

DMP IP54

5 LENS

DF Diffused
CL Clear

For representation of LED visibility, see Diode Visibility section on following pages. For beam angles, see Photometric Performance section on following pages.

6 EXTERNAL LOUVER

N/A No Louver

7 WIRE INPUT/OUTPUT

SINGLE (Input Only)
S2 Bottom Feed

8 CONNECTOR/WIRE IN

BW Bare Wire (Standard 36")

BW: Standard length is 36", max length is 120". Request custom length by writing in part number next to BW (example: BW48)

9 CONNECTOR/WIRE OUT

CLS Closed End (No feed)

BW: Standard length is 36", Max length is 120". Request custom length by writing in part number next to BW (example: BW48)

10 WIRE COLOR

SV Silver

11 WIRE TYPE

AWM Appliance Wiring Material

12 MOUNTING

SK Suspension Bracket

13 FINISH

ST Satin
BK Black
BZ Bronze
WH White
CU Custom

Custom finishes have longer lead times. Non-RAL 9003 whites custom.

14 LENGTH (IN)

Minimum length is 12", maximum length is 98" not including end caps. Contact us for lengths under 12".

15 EXACT/OPTIMAL

O Optimal Illumination
E Exact Specified Length

Exact fixtures match the exact length you specify, but they may have dim spots at the ends. Optimal fixtures are slightly shorter than the length specified, but provide full illumination from end to end. See Exact/Optimal Fixture Length charts.

© 2026 QTL. All rights reserved | 155 Hill St. Milford, CT 06460 | 203-367-8777 | sales@QTL.lighting | www.QTL.lighting

5 year warranty | Warranty only valid with QTL power supplies | Field modifications void warranty | Data subject to change, all data has +/- 5% tolerance

VERS-LOUVER-SK (07) FOR TUNABLE APPLICATIONS

24VDC Linear Fixtures - Suspended

1 PRODUCT - DIMENSIONS

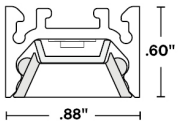

Profile with lens

2 DELIVERED LUMENS

[Calculated L70 = 70000 hrs]
Tested with VERS-07-SK-DW-**-**-DRY

	2.5HE W/FT														
	2000K			2700K			3000K			4000K			5500K		
	LM/FT	CRI	UGR	LM/FT	CRI	UGR	LM/FT	CRI	UGR	LM/FT	CRI	UGR	LM/FT	CRI	UGR
CL	110	94	≤ 14.3	119	98	≤ 14.6	125	98	≤ 14.5	131	97	≤ 14.6	141	97	≤ 14.9
DF	87	93	≤ 14.5	96	98	≤ 14.9	102	98	≤ 15	106	98	≤ 15.2	115	97	≤ 15.5

5 DIODE VISIBILITY

DF - Diffused lens

CL - Clear lens

PHOTOMETRIC PERFORMANCE

Nominal beam spread shown, beam spread varies based on light engine. For more detailed information, see photometric data.

6W/ft

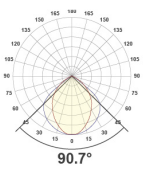

Clear lens

TEMPERATURE RATINGS

		DW 1.5 HE W/FT				DW 2.5 HE W/FT			
		Q-Tran power supply other than DALI, DMX		DALI, DMX, or non-Q-Tran power supply		Q-Tran power supply other than DALI, DMX		DALI, DMX, or non-Q-Tran power supply	
		Min	Max	Min	Max	Min	Max	Min	Max
DRY	Ambient Operating Temp - Surface	-4°F	145°F	-4°F	135°F	-4°F	135°F	-4°F	120°F
DMP	Ambient Operating Temp - Surface	-4°F	140°F	-4°F	130°F	-4°F	130°F	-4°F	115°F
WET	Ambient Operating Temp - Surface	-4°F	140°F	-4°F	130°F	-4°F	130°F	-4°F	115°F

© 2026 QTL. All rights reserved | 155 Hill St. Milford, CT 06460 | 203-367-8777 | sales@QTL.lighting | www.QTL.lighting

VERS-LOUVER-SK (07) FOR TUNABLE APPLICATIONS

24VDC Linear Fixtures - Suspended

7 WIRE INPUT/ OUTPUT

SINGLE (Input only)

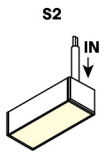

CONFIGURATION OPTIONS

Single Feed

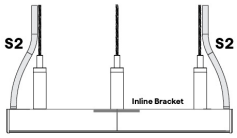

Continuous Row End Feeds

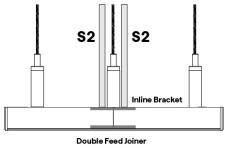

Continuous Row Center Feeds

8 / 9 CONNECTOR/WIRE – IN/OUT

Connector/Wire In or Out not needed to specify product.

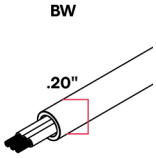

Bare Wire 36" | 22 AWG
Clear outer jacket, metal shield

10 WIRE COLOR

Silver

12 MOUNTING

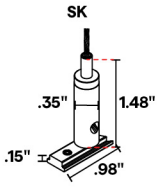

Suspension Bracket

2 required up to 6' lengths; additional support required between 6' to 8'

13 FINISH

Satin

Black

Bronze

White

Custom finishes require a longer lead time, consult factory

© 2026 QTL. All rights reserved | 155 Hill St. Milford, CT 06460 | 203-367-8777 | sales@QTL.lighting | www.QTL.lighting

15 EXACT/OPTIMAL FIXTURE LENGTH

E/O Length Calculator → E/O Explained →

Exact fixtures are the exact length specified. Optimal fixtures' length is rounded down based on LED cut points to allow the fixture to be illuminated end to end. For runs with multiple fixtures that need to fill a specific length, it's recommended to order all optimal fixtures with an exact fixture at the end of the run.

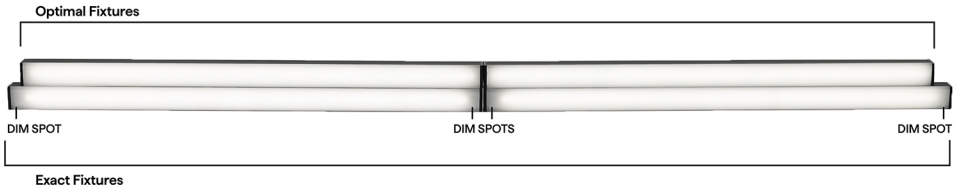

DW-HE DRY DMP LENGTHS BY INCH

EXACT LENGTH

Requested Length	Potential dim spot on either end of a S1 fixture 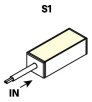 End Feed
12"	1"
13"	0.5"
14"	1"
15"	0.5"
16"	1"
17"	0.5"
18"	1"
19"	0.5"
20"	1"
21"	0.5"
22"	1"
23"	0.5"
24"	1"
36"	1"
48"	1"
60"	1"
72"	1"
84"	1"
96"	1"

OPTIMAL LENGTH

Requested Nominal Length	S2 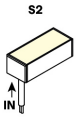 Bottom Feed
12"	11.41"
13"	12.41"
14"	13.41"
15"	14.41"
16"	15.41"
17"	16.41"
18"	17.41"
19"	18.41"
20"	19.41"
21"	20.41"
22"	21.41"
23"	22.41"
24"	23.41"
36"	35.41"
48"	47.41"
60"	59.41"
72"	71.41"
84"	83.41"
96"	95.41"

© 2026 QTL. All rights reserved | 155 Hill St. Milford, CT 06460 | 203-367-8777 | sales@QTL.lighting | www.QTL.lighting

VERS-LOUVER-SK (07) FOR TUNABLE APPLICATIONS

24VDC Linear Fixtures - Suspended

COMPATIBLE POWER SUPPLIES

See power supplies cut sheets for more information. Data subject to change, all data has +/- 5% tolerance.

DIM TO LEVEL	INDOOR
	DW-HE Tunable Applications
0.1%	QT-CAB-eLED+DALI-DT6 QT-CAB-eLED+DALI-DT8 QT-CAB-eLED+DALI-DT8-AWN QT-CAB-eLED+TW QT-CAB-eLED+TW-AWN QTM-eLED+DALI-DT6 QTM-eLED+DALI-DT8 QTM-eLED+DALI-DT8-AWN QTM-eLED+TW QTM-eLED+TW-AWN QZ-DMX
1%	QZ-DALI-DT8
10%	Non-Dim Power Supply with TW App Dongle

DIMMING PROTOCOL	INDOOR
	DW-HE Tunable Applications
0-10V	QT-CAB-eLED+TW QT-CAB-eLED+TW-AWN QTM-eLED+TW QTM-eLED+TW-AWN
Lutron Athena	QT-CAB-eLED+DALI-DT8-AWN QT-CAB-eLED+TW-AWN QTM-eLED+DALI-DT8-AWN QTM-eLED+TW-AWN
DMX LED wattage must be doubled for DW-HE products	QZ-DMX
DALI-2: DT6 LED wattage must be doubled for DW-HE products except for AWN	QT-CAB-eLED+DALI-DT6 QTM-eLED+DALI-DT6
DALI-2: DT8 LED wattage must be doubled for DW-HE products except for AWN	QT-CAB-eLED+DALI-DT8 QT-CAB-eLED+DALI-DT8-AWN QTM-eLED+DALI-DT8 QTM-eLED+DALI-DT8-AWN QZ-DALI-DT8
SCENE App Dimmed	Non-Dim Power Supply with TW App Dongle

COMPATIBLE WIRING ACCESSORIES

Q-mini-J5

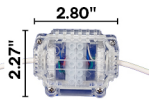

UL Listed, miniature junction box, DRY/DMP (WET rated with silicone)

© 2026 QTL. All rights reserved | 155 Hill St. Milford, CT 06460 | 203-367-8777 | sales@QTL.lighting | www.QTL.lighting

VERS-LOUVER-SK (07) FOR TUNABLE APPLICATIONS

24VDC Linear Fixtures - Suspended

COMPATIBLE CONTROL ACCESSORIES

SCENE APP DONGLE

Wi-Fi or Bluetooth Connectivity

COMPATIBLE APPS

NFC APP

Q-NFC

Read and write DMX addresses and adjust voltage

VERS-SK

Linear Fixtures - Suspended

- Shop drawings required for run lengths over 8ft
- If no suspension length provided, 36" is standard
- Suspension cable maximum length: 120"
- Suspension cable is field cuttable
- Suspended fixtures over 6ft require additional suspension points. 8ft lengths will bow 0.25" in middle without additional support.
- Any run length over 8' requires inline brackets
- Consult factory for power over aircraft
- Consult factory for custom color of canopy
- Lag Screw is for mounting into drywall, wood, or other types of finished ceilings for non-feed mounting only

POWER FEED SUSPENSION KIT

1 PRODUCT	2 FEED	3 CANOPY SHAPE	4 CANOPY SIZE	5 CANOPY FINISH	6 APPLICATION	7 SUSPENSION CABLE LENGTH (IN)
SK			5"			

Sample Part Number: **SK-SF-RD-5"-WH-JB-36"**

1 PRODUCT

SK	

2 FEED

SF	Single
DF	Double

3 CANOPY SHAPE

RD	Round
SQ	Square

4 CANOPY SIZE

5"

5 CANOPY FINISH

WH	White
BK	Black

6 APPLICATION

JB	Junction Box
TB	T-Bar Mount

JB - mounting bracket only, junction box not included
TB - mounting bracket and junction box

7 SUSPENSION CABLE LENGTH (IN)

36"
120"

NON-FEED SUSPENSION KIT

1 PRODUCT	2 FEED	3 CANOPY SHAPE	4 CANOPY SIZE	5 CANOPY FINISH	6 APPLICATION	7 SUSPENSION CABLE LENGTH (IN)
SK	NF					

Sample Part Number: **SK-SF-RD-5"-WH-JB-36"**

1 PRODUCT

SK	

2 FEED

NF	No Feed

3 CANOPY SHAPE

RD	Round
SQ	Square

4 CANOPY SIZE

2"
5"
5"

5 CANOPY FINISH

WH	White
BK	Black
WH	White
BK	Black

6 APPLICATION

TB	T-Bar Mount
LS	Lag Screw

TB - T-Bar clip only, junction box not included

JB	Junction Box

Mounting bracket only, junction box not included

7 SUSPENSION CABLE LENGTH (IN)

36"
120"

KIT CONTENTS

- 1/16" Steel suspension cable – 36" standard
- Selected canopy
- Cable Gripper
- Cable Coupler

JBOX
- Bracket to mount to junction box (junction box not included)
- Wire strain relief
- Ties for securing electrical cable to suspension cable

T-BAR – feed
- Includes junction box specifically designed for T-BAR applications
- Bracket to mount to junction box
- Wire strain relief
- Ties for securing electrical wire to suspension cable

T-BAR – non-feed
- Bracket to mount to T-BAR (no junction box)

LAG SCREW – non-feed only
- Double ended screw, with a wood thread side and machine thread side
- One piece cable coupler

© 2024 QTL. All rights reserved | 155 Hill St. Milford, CT 06460 | 203-367-8777 | sales@QTL.lighting | QTL.lighting

VERS-SK

Linear Fixtures - Suspended

3 CANOPY OPTIONS

RD - 2" - NF

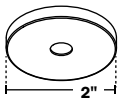

Round
2"
No Feed

SQ - 2" - NF

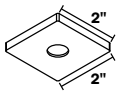

Square
2"
No Feed

RD - 5" - NF

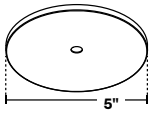

Round
5"
No Feed

SQ - 5 - NF

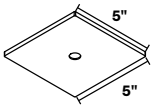

Square
5"
No Feed

RD - 5" - SF

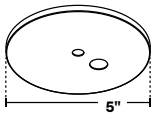

Round
5"
Single Feed

SQ - 5" - SF

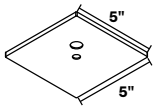

Square
5"
Single Feed

RD - 5" - DF

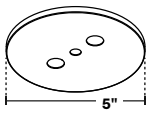

Round
5"
Double Feed

SQ - 5" - DF

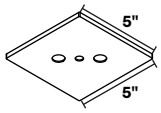

Square
5"
Double Feed

5 CANOPY FINISH

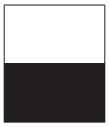

White

Black

JOINTS/CONNECTORS

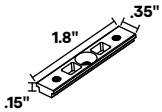

Inline Bracket

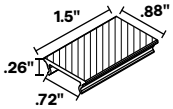

Double Feed Joiner

6 APPLICATION

TB
Power Feed Kit

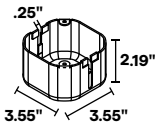

T-Bar Junction Box

TB
Non-Feed Kit

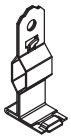

T-Bar Clip

LS

Lag Screw

KIT HARDWARE

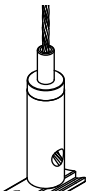

Cable Gripper

Cable Coupler

© 2024 QTL. All rights reserved | 155 Hill St. Milford, CT 06460 | 203-367-8777 | sales@QTL.lighting | QTL.lighting

VERS-SK

Linear Fixtures - Suspended

MOUNTING

- Maximum single fixture length: 98”
- Suspended fixtures over 6ft require additional suspension points. 8ft lengths will bow 0.25” in middle without additional support.
- Shop drawings required for run lengths over 8ft
- Any double fed fixture will come with double feed joiner and inline bracket

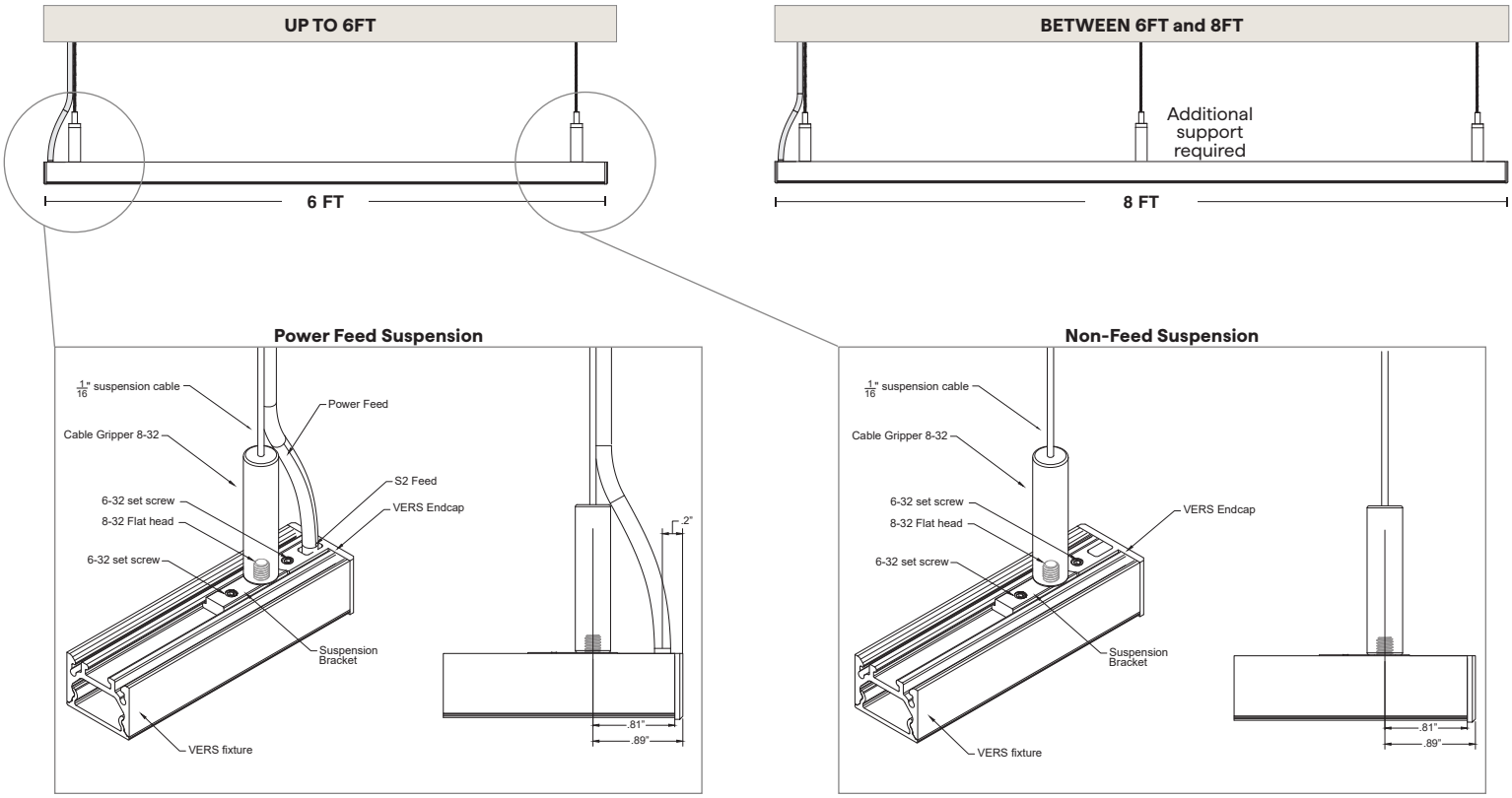

© 2024 QTL. All rights reserved | 155 Hill St. Milford, CT 06460 | 203-367-8777 | sales@QTL.lighting | QTL.lighting

VERS-SK

Linear Fixtures - Suspended

MOUNTING

- Maximum single fixture length: 98"
- Suspended fixtures over 6ft require additional suspension points. 8ft lengths will bow 0.25" in middle without additional support.
- Shop drawings required for run lengths over 8ft
- Any double fed fixture will come with double feed joiner and inline bracket

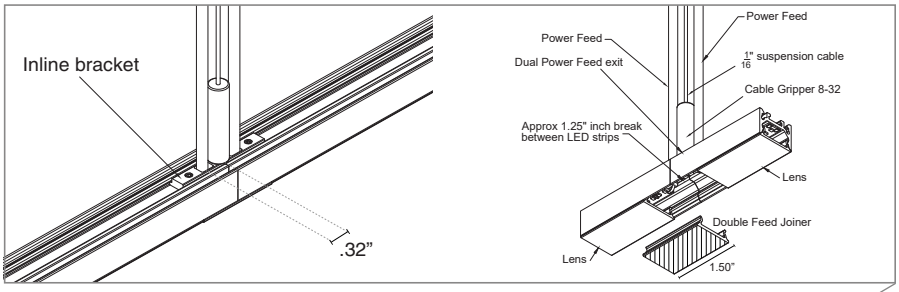

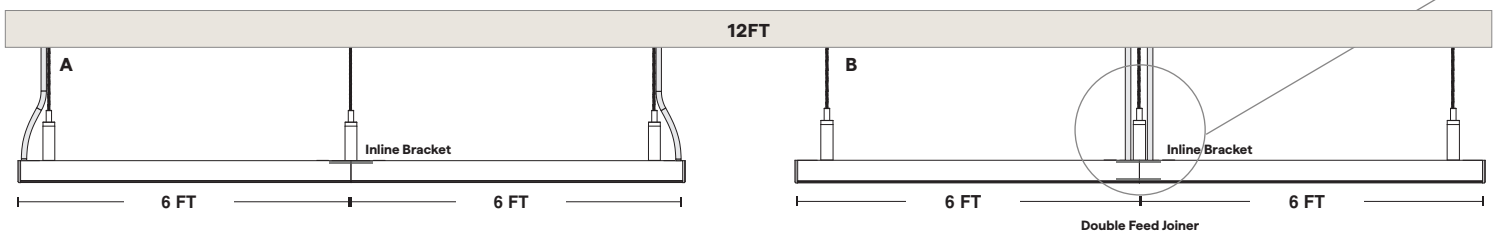

Part number example for a suspended VERS-01 dry rated static white fixture with a diffused lens in 1.5W/ft, 3000K, in a satin finish:

A VERS-01-SK-SW-1.5-30-DRY-DF-N/A-S2-BW-CLS-SV-AWM-SK-ST-144" (1X)
SK-SF-RD-5"-WH-JB-36" (2X)
SK-NF-RD-5"-WH-JB-36" (1X)

B VERS-01-SK-SW-1.5-30-DRY-DF-N/A-S2-BW-CLS-SV-AWM-SK-ST-144" (1X)
SK-DF-RD-5"-WH-JB-36" (1X)
SK-NF-RD-5"-WH-JB-36" (2X)

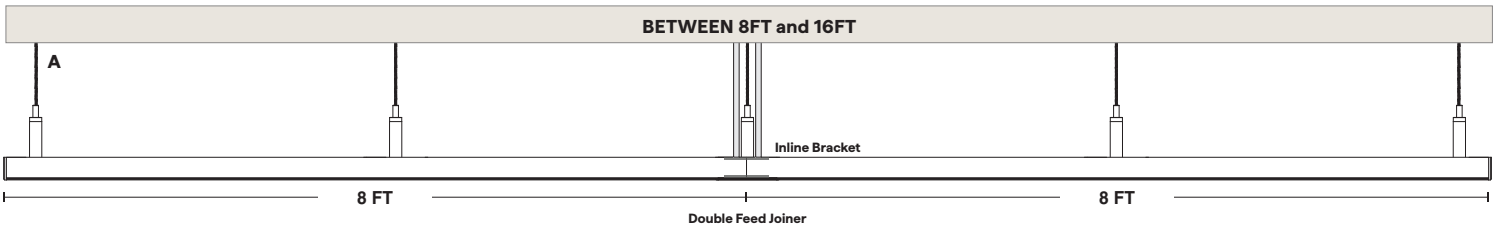

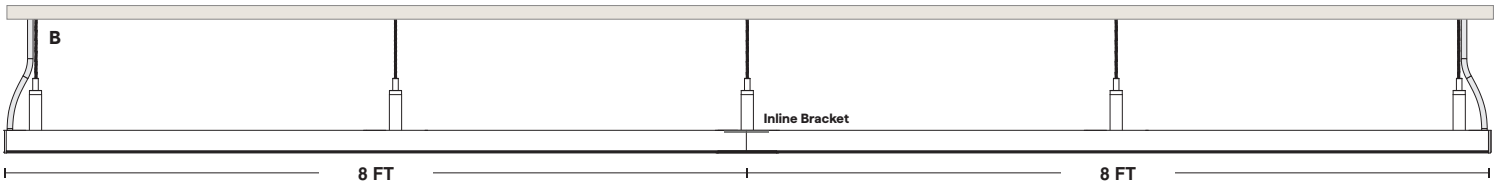

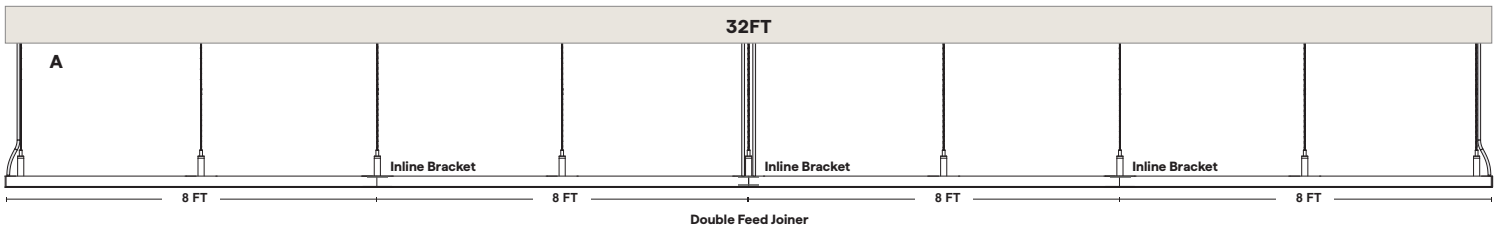

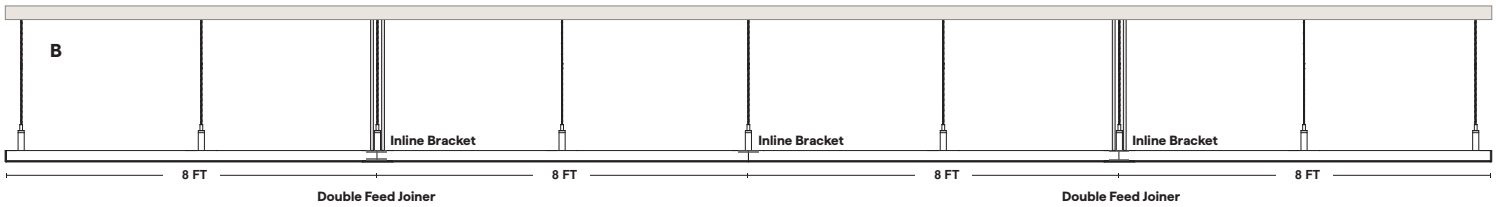

© 2024 QTL. All rights reserved | 155 Hill St. Milford, CT 06460 | 203-367-8777 | sales@QTL.lighting | QTL.lighting

VERS-SK

Linear Fixtures - Suspended

SUSPENSION T-BAR POWER FEED ASSEMBLY

SK-SF-RD-5-**-TB-36

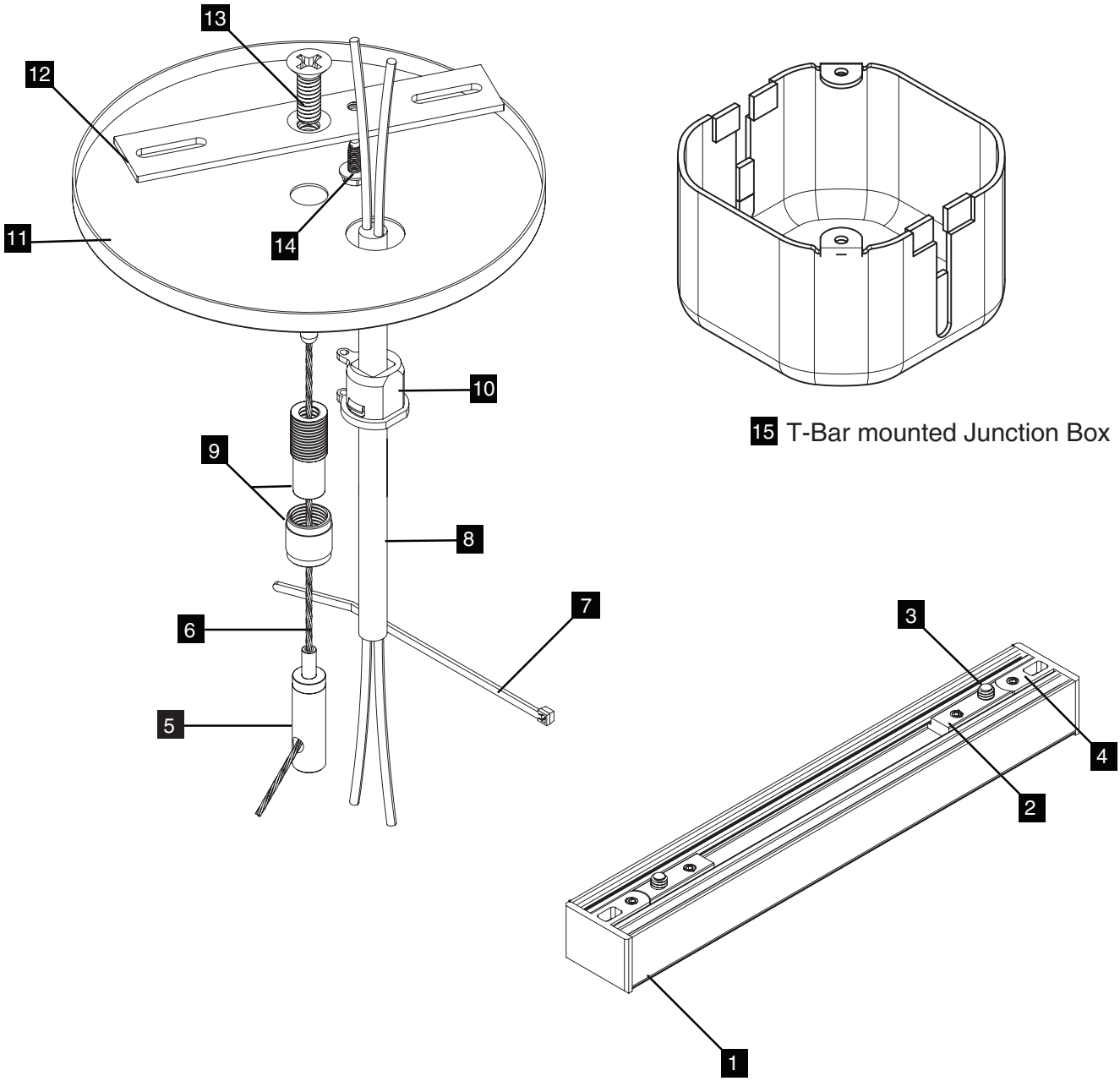

VERS SUSPENSION COMPONENTS

1 VERS	2 Suspension Bracket	3 8-32 Screw	4 Endcap	5 Cable Gripper	6 1/16” Cable	7 Tie
8 Lead Wire	9 Cable Coupler	10 Strain Relief	11 Canopy	12 Crossbar	13 1/4”-20	14 Ground Screw

© 2024 QTL. All rights reserved | 155 Hill St. Milford, CT 06460 | 203-367-8777 | sales@QTL.lighting | QTL.lighting

VERS-SK

Linear Fixtures - Suspended

SUSPENSION POWER FEED ASSEMBLY - TO MOUNT TO JUNCTION BOX*

*JUNCTION BOX NOT INCLUDED

SK-SF-RD-5-**-JB-36

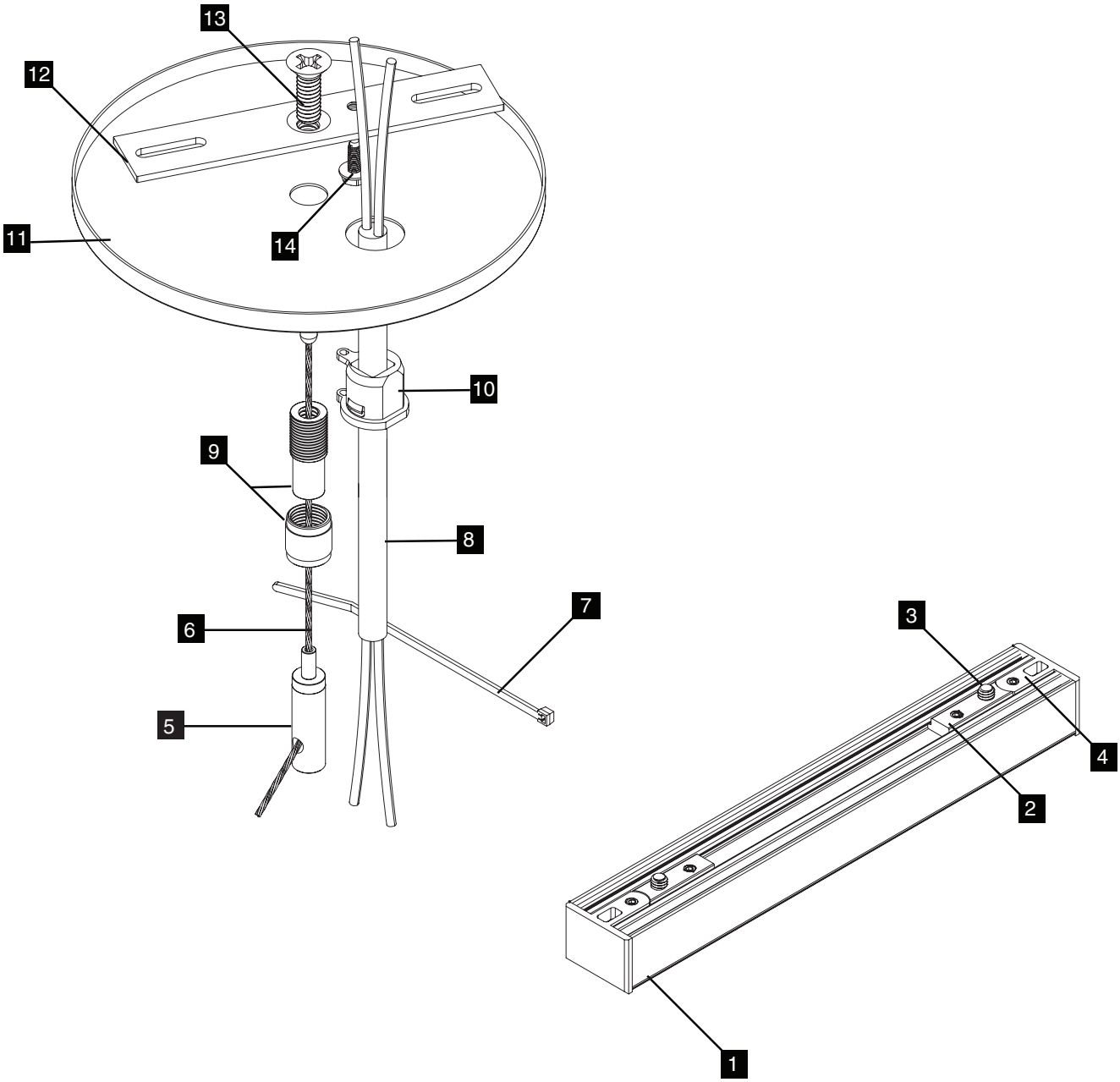

VERS SUSPENSION COMPONENTS

1 VERS	2 Suspension Bracket	3 8-32 Screw	4 Endcap	5 Cable Gripper	6 1/16” Cable	7 Tie
8 Lead Wire	9 Cable Coupler	10 Strain Relief	11 Canopy	12 Crossbar	13 1/4”-20	14 Ground Screw

© 2024 QTL. All rights reserved | 155 Hill St. Milford, CT 06460 | 203-367-8777 | sales@QTL.lighting | QTL.lighting

VERS-SK

Linear Fixtures - Suspended

SUSPENSION T-BAR NON-FEED ASSEMBLY

SK-NF-RD-2-NF-*-TB-36

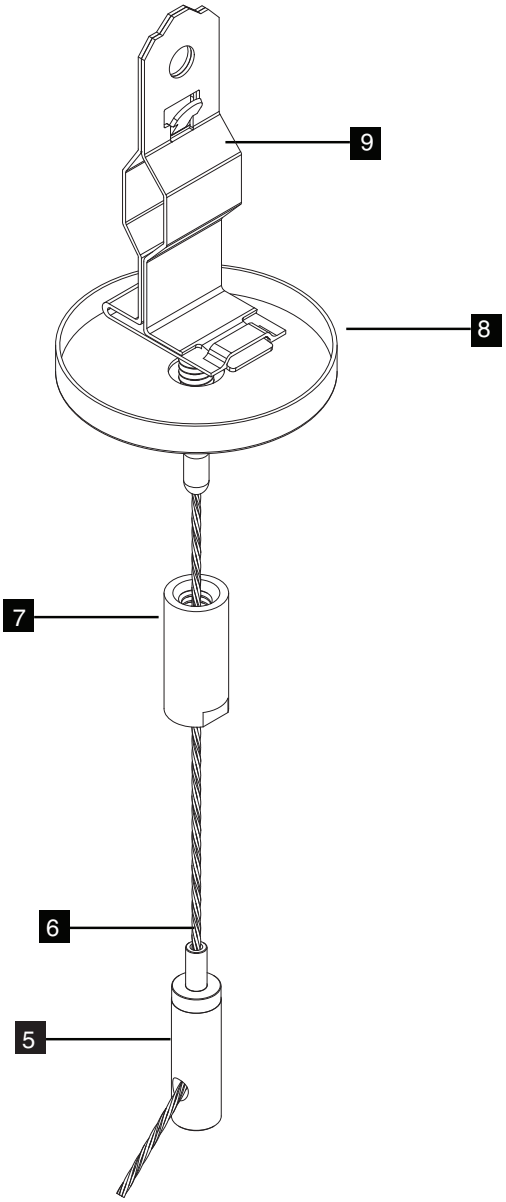

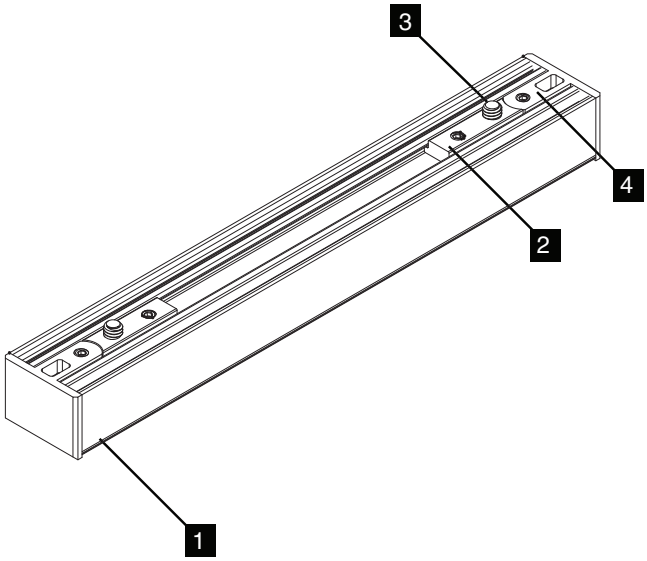

NON-POWERED FEED KIT

1 VERS	2 Suspension Bracket	3 8-32 Screw	4 Endcap	5 Cable Gripper
6 1/16” Cable	7 Cable Coupler	8 Canopy	9 T-Bar Clip	

© 2024 QTL. All rights reserved | 155 Hill St. Milford, CT 06460 | 203-367-8777 | sales@QTL.lighting | QTL.lighting

LAG SCREW NON-FEED ASSEMBLY

SK-NF-RD-2-NF-*-LS-36

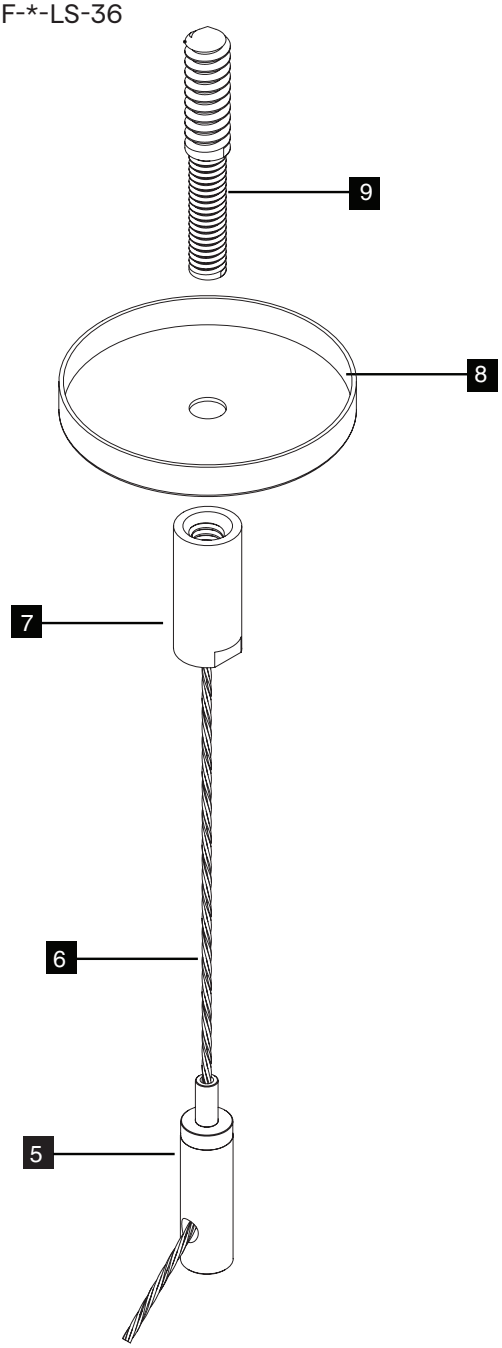

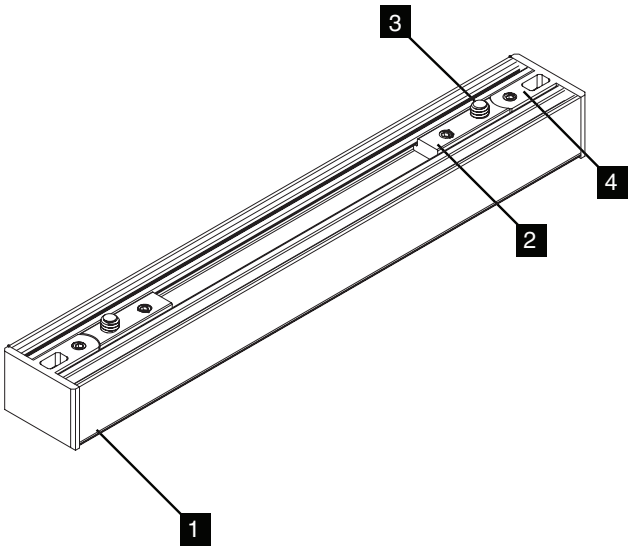

NON-POWERED FEED KIT

1 VERS	2 Suspension Bracket	3 8-32 Screw	4 Endcap	5 Cable Gripper
6 1/16” Cable	7 Cable Coupler	8 Canopy	9 Lag Screw	

© 2024 QTL. All rights reserved | 155 Hill St. Milford, CT 06460 | 203-367-8777 | sales@QTL.lighting | QTL.lighting